Stan's Safari *41*

STAN INVESTIGATES THE 'LINE-ARRAY' LOUDSPEAKER CONCEPT, AND BUILDS HIS OWN EXAMPLE

Loudspeakers may come in all shapes and sizes, yet the great majority are 2- or 3-way boxes loaded with cone type drive units. So how can the manufacturers create a stand-out product that generates customer appeal? From time to time manufacturers invent (or more frequently re-invent) variations on a theme that, after an initial flurry, may fade away. The latest of these is the line-source or column loudspeaker, which some are promoting as the answer to an audiophile's dreams. Some makers highlight the fact that most music concerts use high-tech line-source sound systems, so if you want to hear U2 or The Eagles sound like they did at their last gig then a line-source system in the home has to be the way to go. Apart from the dubious engineering logic behind such a claim (the Pros use line arrays which are not quite the same thing), there's every chance that the sound quality at the live gig was far from good.

So what is a line-source loudspeaker; how does it work and how well does it perform? Let's start with the column speaker often seen used for Public Address systems in railway stations and churches. The first documented system was installed at the White City stadium in 1933, followed in the 1950s by an extraordinary system in St. Paul's cathedral (a building with impossible acoustics including a 12 second reverberation time). At its simplest, a line-source speaker consists of a long row of identical drive units in a long rectangular cabinet. The first characteristic of such an array is that it has a polar response that is broad in the horizontal plane and shallow in the vertical plane. Put simply, it generates a wedge-shaped cylindrical wave-front (see Fig.1) compared to the spherical wave-front from a single drive unit.

Two advantages can immediately be seen: nice even coverage over the listening area; and little sound going up or down to bounce off ceilings and floors, creating delayed signals to muddy the sound. With distance this cylindrical wave-front gradually transforms into a spherical wave-front, but we are usually talking about 4m or more, so this can be ignored in a home audio context. Furthermore, the line source sound level will decrease by just 3dB for each doubling of distance in the nearfield, compared to 6dB for a conventional speaker. Thus if the sound level is 100dB at 1m from the speaker, from a line source the level will be 97dB at 2m, against 94dB from the point-source speaker, so the line source will be significantly louder. So far the score is looking like 2-0.

While on the topic of Sound Pressure Levels it is worth noting that when the radiation patterns overlap (this normally being the case) then the combined SPL will be higher. Skipping the math, if 12 drivers each have a sensitivity of 88dB for 1W input, the array will have a total sensitivity of 98.8dB. Thus far we've been talking about theoretically ideal line-source speakers, but a few problems come to light with real world limitations. First that transition from near-field operation (cylindrical wave-front) to far-field operation (spherical wave-front): with a 1.5m tall array the 1kHz transition occurs at about 3m from the speaker, but by 300Hz the distance has dropped to 1m. So the first thing is to extend the array from floor to ceiling, which will create a 'virtual' extension to the array at both ends, effectively tripling the length of the array and so, in our example, lowering the 1m transition to about 70Hz.

But there is a serious problem with arrays. If each driver is mounted on a flat baffle board and fed the same power as all the other drivers, each will have a different sound path to the listener. Those at the top and bottom of the array will create sounds that take a longer path to the listener. These will interfere with the sound from drivers at the centre of the array (where there's a shorter distance to reach the listener), so the listener will hear the same sound at different times from the 12 drivers; sometimes they will add together and sometimes they will cancel out. Whatever, the result will be a very irregular frequency response, and will play havoc with the stereo imaging at higher frequencies. Using small diameter drivers and keeping them very close together minimises the problem but it will not go away.

In theory there should be no more than a half wavelength separation between drivers at their highest operating frequency. So if the distance between the centres of the drivers is, say, 70mm then they shouldn't be used above 7kHz. So a back of envelope calculation shows that for a 15kHz range a row of tweeters need to be very small (around 10mm in diameter). This whole business of secondary off-axis lobes in the polar response is complicated and best left to the designer.

One other way of minimising these effects is to mount the drivers on a concave curved baffle board so that the listener hears sounds that all travel equal distances from all of the drivers. This does work but only for one specific sweet spot, severely limiting the

STAN CURTIS

useable listening positions in the room. A second solution is to roll-off the frequency response of the outer drivers in the array. Effectively, this so called 'power shading' technique varies the height of the array as the frequency changes ensuring that optimum performance is maintained. But this solution adds cost; makes the resulting speaker difficult to install and, unless care is taken, can create phase shifts that could be audible (though phase control is also widely used).

An alternative for a flat baffle line array is to feed slightly different power levels to the drivers. Louder sound levels are produced at the centre of the array compared to the sound level from the ends of the array, and the transition is gradual. This adjustment is helped by the fact that at higher frequencies the centre sounds will arrive at the listener sooner than sounds at the ends of the array. The human ear will tend to react to the first sound it hears, rather than later sounds (the Haas effect), so helping this solution. However, if the power gradient is too severe, the array will start to be heard as a point source (just the central driver) and the line-source benefits will be lost.

A technique once used to achieve this tapering was to put a wodge of sound-attenuating plastic foam in front of each driver; thin at the centre and increasing in thickness towards the ends, which is a very inexpensive solution. Of course in these days of digital processing, it's easy enough to control the level and frequency response of each driver so making the wave-front 'steerable' and focused wherever desired. I've heard such an array working and it is very impressive, but I consider it technology overkill for the home.

My own experience of line-source arrays in the home came about by accident some years ago. I had designed some equipment for a Chinese manufacturer and this required me to develop a full-range; long-throw driver with a whopping great magnet and a nominally 50mm cone. At the end of the project I found myself with several hundred of these drivers in boxes in the garage. I can't remember the motivation but one weekend I set about building two arrays which would just fit between floor and ceiling of the library in my then rambling Victorian pile. The array length was about 12 feet in length and the 48 drivers were wired in parallel in groups of six giving a load of about 1.5 ohms for each of the eight 20W stereo amplifiers. For simplicity, the drivers were left open-backed, as I didn't have the time or inclination to build a sealed cabinet. These two Heath-Robinson contraptions were wedged between floor and ceiling with no other means of support. The whole exercise was completed in a weekend, and the result was not what you'd call pretty. But the sight of 96 shiny aluminium cones in two lines was certainly eye-catching.

Fig. 1

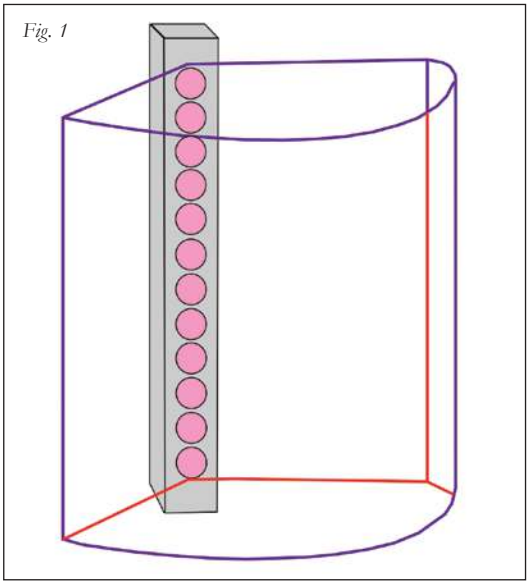

I had no idea what to expect, but the results were impressive from the off. They were loud; very loud with the volume control being confined to the lowest 10% of its range and the bass was tight and powerful although obviously lacking real floor shaking depth. But best of all was the imaging which, in the optimum sofa position, was in a class of its own better than the best point-source loudspeaker I know (the Quad Electrostatic). Initial results were so good I felt we were well placed for a *HIFICRITIC* 'Audio Excellence' award. So what went wrong; why did it get dismantled & returned to the garage? The low bass was rather thin but that could have been overcome with a pair of subwoofers. The appearance made Meccano look like the height of elegance, but again that could have been refined with time. What did for my line-source loudspeaker was that its overall sound was that of a very powerful version of my 50mm drive unit, because after all I was listening to the combined contributions of 96 identical drivers. And this remains the key stumbling block of line-source loudspeaker development. You have to start with one really excellent drive unit then build up from there, and that can make the resulting loudspeaker very, very expensive.

Nevertheless I'm quite taken with the design of these arrays and I hope to return to my workshop in the future, particularly if I need to counter the effects of ageing on my ears. I'm rather impressed by a design built by Pamphonic for the Broadmoor institution in the 1960s. It had three 20 foot long columns on a tower and they were fed by 1kW of audio power and used to warn the local population if a 'mad axeman' escaped. Apparently it was clearly audible from 3 miles away. Sounds like a potential answer to an old rock musician's hearing loss syndrome!

"These two Heath-Robinson contraptions were wedged between floor and ceiling with no other means of support. The whole exercise was completed in a weekend, and the result was not what you'd call pretty. But the sight of 96 shiny aluminium cones in two lines was certainly eye-catching"